LONG SEAMS	
COURSE	ORIENTATION
1 (TOP)	225°
2	232°
3	225°
4	232°

*VERT – TOP TO BOTTOM

Ship loose items:
(4 QTY.) SHIM PLATES FOR ANCHORS △1

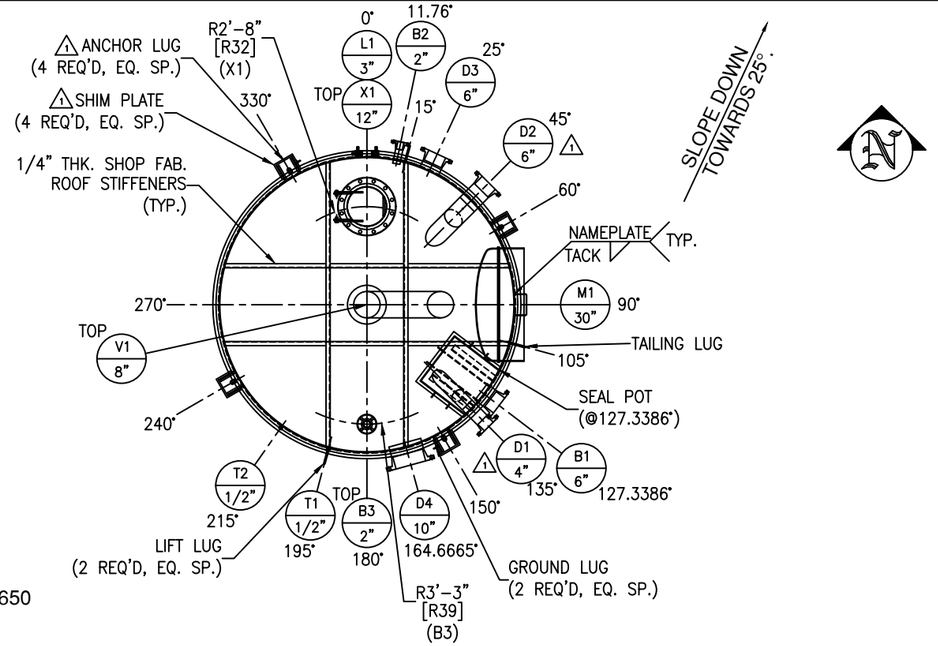

NOTE 7: SPOT X-RAY AS PER API 650 FOR B2, M1 & M1 REPAD.

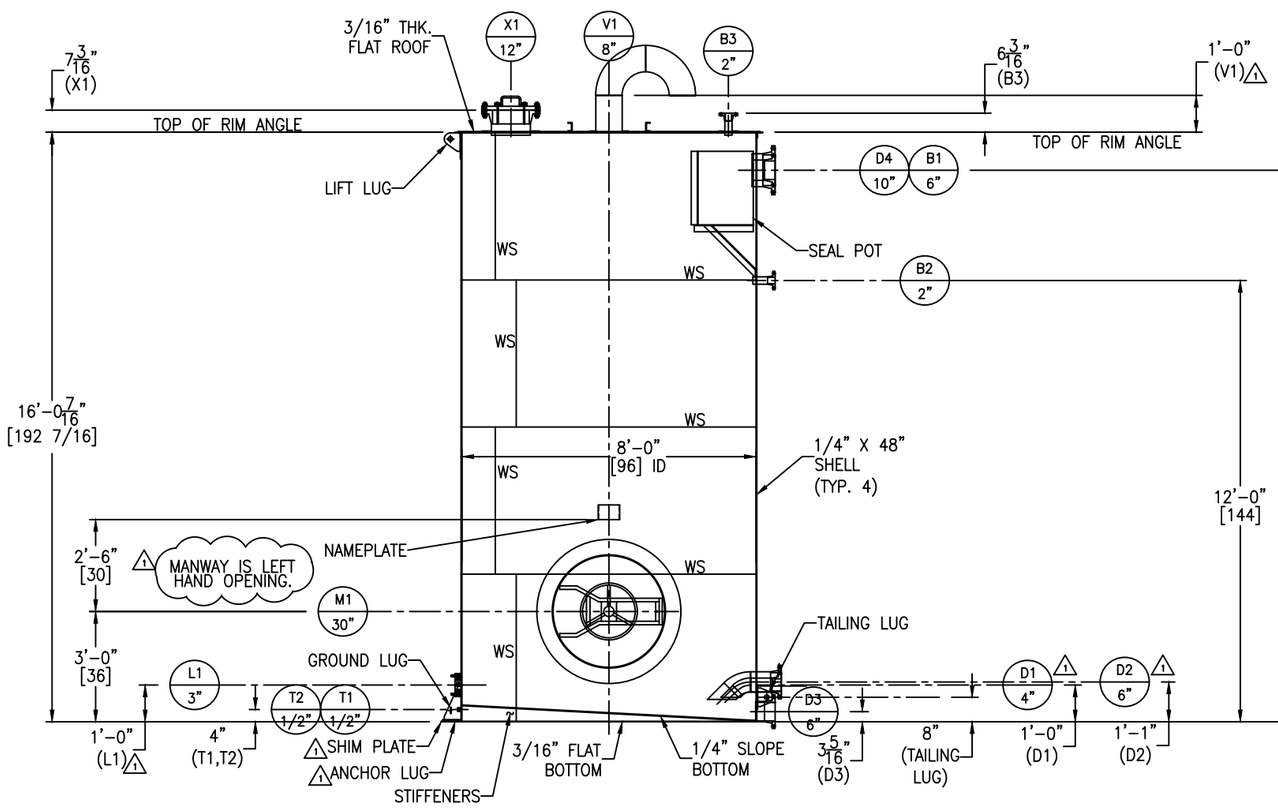

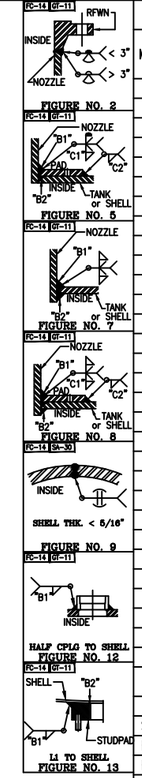

NOZZLE SCHEDULE

MARK	SERVICE	SIZE	RATING	TYPE / STYLE	NECK SCHED.	PROJECTION EXT. (℄)	PROJECTION INT. (MIN.)	WELD FIGURE	REPAD SIZE (WIDTH X THK.)	WELD SIZE "A1"	"A2"	"B1"	"B2"	"C1"	"C2"
B1	PROCESS INLET	6"	150#	RFWN	40S	6"	1"	2,7	–	–	–	1/4	1/8	–	–
B2	PROCESS INLET	2"	150#	RFWN	80S	6"	1"	2,7	–	–	–	1/4	1/8	–	–
B3	WATER SPRAY	2"	150#	RFWN	80S	SEE DWG	1"	2,8	2" X 3/16"	–	–	1/4	1/8	3/16	3/16
D1	PROCESS OUTLET	4"	150#	RFWN	40S	△1 8"	SEE DWG	2,7	–	–	–	1/4	1/4	–	–
D2	PROCESS OUTLET	6"	150#	RFWN	40S	△1 8"	SEE DWG	2,7	–	–	–	1/4	1/4	–	–
D3	DRAIN	6"	150#	RFWN	40S	6"	–	2,5	2" X 1/4" SEE DWG	–	–	1/4	1/8	1/4	1/4
D4	OVERFLOW	10"	150#	RFWN	40S	6"	1"	2,7	–	–	–	1/4	1/4	–	–
L1	LEVEL	3"	–	SP. STUDPAD	–	–	–	13	–	–	–	1/4	1/4	–	–
M1	MANWAY	30"	–	CM-2	1/4"	3"	SEE DWG	8	5" X 1/4"	–	–	1/4	1/4	1/4	1/4
V1	VENT	8"	–	PIPE W/ ELBOWS	40S	SEE DWG	–	5	2" X 3/16"	–	–	1/4	1/8	3/16	3/16
X1	INSPECTION HATCH	12"	150#	RFWN W/ BLIND	40S	SEE DWG	1"	2,8	3" X 3/16"	–	–	1/4	1/8	3/16	3/16
T1	TEST COUPLING	1/2"	3000#	HALF THRD CPLG W/ PLUG	–	–	–	12	–	–	–	1/4	–	–	–
T2	TEST COUPLING	1/2"	3000#	HALF THRD CPLG W/ PLUG	–	–	–	12	–	–	–	1/4	–	–	–

MATERIALS OF CONSTRUCTION

	VESSEL
SHELL	SA240-316/316L
FLAT TOP / SLOPE BTM	SA240-316/316L
RIM ANGLE	SA479-316/316L
NOZZLE NECKS	SA312-316/316L WLD & SA403-316/316L WPB
NOZZLE FLANGES	SA182F-316/316L
COUPLING/PLUG	SA182F-316/316L
MANWAY NECKS	SS316
MANWAY FLANGES	SS316
NOZZLE GASKETS	GARLOCK 3000
MANWAY GASKETS	BUNA-N
SEAL POT	SA240-316/316L
SEAL POT STIFFENERS	SA479-316/316L
STUD PAD	SA240-316/316L OR SA182F-316/316L
INSULATION RING	–
BOLTS/STUDS (NOZZLE)	SA193-B8 (TEFLON COATED)
NUTS (NOZZLE)	SA194-8 (TEFLON COATED)
REPADS	SA240-304/304L
SUPPORTS/HOLD DOWNS	SA240-304/304L
LIFTING / TAILING LUGS	SA240-304/304L
GROUND LUG	SA240-304/304L
BOTTOM / ROOF STIFFENERS	SA240-304/304L
FLAT BOTTOM	SA240-304/304L
SHIM PLATE	△1 SA240-304/304L
PLATFORM CLIPS	–
DIPTUBE SUPPORT	–
JACKET SHELL	–
JACKET HEADS	–
JACKET NOZZLE NECKS	–
JACKET NOZZLE FLANGES	–

DESIGN DATA

	VESSEL
DESIGN AND FAB. CODE	API650
CERT. STAMP REQ'D.	NO
DESIGN PRESSURE	ATM
DESIGN TEMPERATURE	194° F
MIN. DESIGN METAL TEMP.	-20° F @ ATM
OPERATING PRESSURE	△1 ATM
OPERATING TEMPERATURE	△1 115 °F
JOINT EFFICIENCY HEADS	0.70
JOINT EFFICIENCY SHELL	0.70
CORROSION ALLOWANCE	0"
SPECIFIC GRAVITY	1.0
EARTHQUAKE ZONE	Ss = (0.526) S1 = (0.23)
WIND LOAD	99 MPH
STRESS RELIEF	NOT REQ'D
RADIOGRAPHIC EXAM	SEE NOTE 7
DYE PENETRANT EXAM	NOT REQ'D
MAGNETIC PARTICLE EXAM	NOT REQ'D
HYDROSTATIC TEST	–
PNEUMATIC TEST	2 PSIG / GAUGE #1
JKT DESIGN AND FAB. CODE	–
JKT CERT. STAMP REQ'D.	–
JKT DESIGN PRESSURE	–
JKT DESIGN TEMPERATURE	–
JKT MIN. DESIGN METAL TEMP.	–
JKT OPERATING PRESSURE	–
JKT OPERATING TEMPERATURE	–
JKT JOINT EFFICIENCY HEADS	–
JKT JOINT EFFICIENCY SHELL	–
JKT HYDRO TEST	–

VESSEL FINISH

INTERIOR WELD TREATMENT:	SAV TANK STANDARD
EXTERIOR WELD TREATMENT:	SAV TANK STANDARD
SAV TANK FINISHING STANDARD:	SEE NOTE 6
INSULATION:	N/A
PAINTING:	N/A

VESSEL CAPACITY AND WEIGHTS

OPERATING CAPACITY	4,200 GAL.
FULL CAPACITY	6,000 GAL.
EMPTY SHIPPING WEIGHT	8,200 LBS.
WEIGHT FULL OF WATER	58,500 LBS.
WEIGHT FULL OF PRODUCT	58,500 LBS.

QUALITY CONTROL

ENG. _____ DATE: _____

Q.C. _____ DATE: _____

This drawing is issued for customer approval. please review, make approval changes (if any) in red. check the appropriate box, sign & date.

- ☐ Approval – no changes. Please proceed with fabrication.
- ☐ Approved as noted. Please proceed with fabrication
- ☐ Not approved. Please make changes and resubmit.

Customer signature _____ Date _____

GENERAL NOTES

1.) COVER ALL FLANGES, OPENINGS & MACHINED SURFACES PRIOR TO SHIPMENT UNLESS OTHERWISE NOTED.
2.) BOLT HOLES TO STRADDLE 0° & 180° UNLESS OTHERWISE NOTED.
3.) NOZZLE REPADS TO HAVE (1) ø1/4" TELL-TALE HOLES ON HORIZONTAL CENTER LINE.
ALL OTHER REPADS TO HAVE (1) ø1/4" WEEP HOLE AT LOWEST POINT ON PAD.
4.) MANUFACTURING TOLERANCE TO BE IN ACCORDANCE WITH API STANDARD 650 7.5.
5.) ASME MATERIALS TO CONFORM TO THE FOLLOWING: FLANGES – B16.5, FITTINGS – B16.9 & COUPLINGS – B16.11.
6.) PICKLE ALL EXTERIOR WELDS. PASSIVATE INTERIOR & EXTERIOR OF VESSEL.
7.) X-RAY: SPOT X-RAY AS PER API 650 FOR B2, M1 & M1 REPAD.

△1 REVISIONS

REV	D.BY	C.BY	DATE	DESCRIPTION
2				AS BUILT
1	AD	RS	5/21/25	CERTIFIED
0	RS	AD	2/18/25	APPROVAL

Savannah Tank & Equipment Corp.
1517 Telfair Road, Savannah, GA 31415
(912) 233-8902

DRAWN BY: RS
CHK'D BY: AD
APPROVED BY: NP
SCALE: 3/8" = 1'-0"

KIMBERLY CLARK
CLEAR FILTRATE TANK
EQUIP. # 360-TK-36101
CUST. PO #C000139275

DRAWING NO.: 015-25-1 | SHT 1 OF 5 | REV. SET 1

FC-14

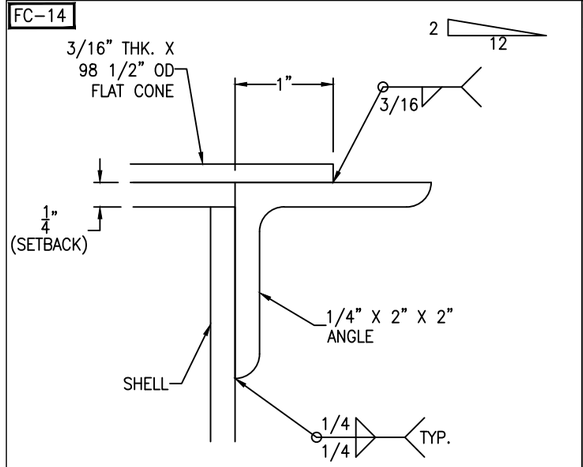

RIM ANGLE DETAIL

SCALE: 1'-0" = 1'-0"

FC-14

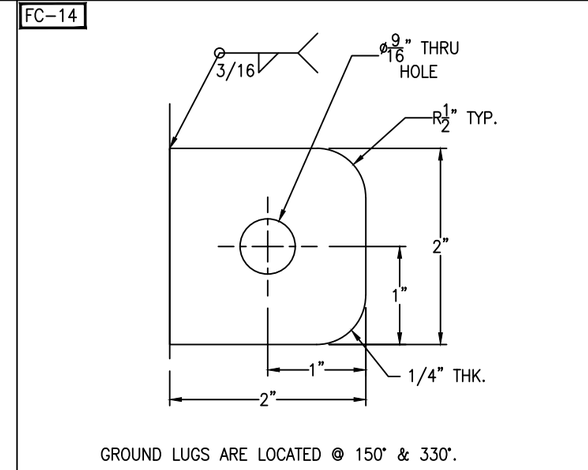

GROUND LUG DETAIL

(2 REQ'D) SCALE: 1'-0" = 1'-0"

FC-14

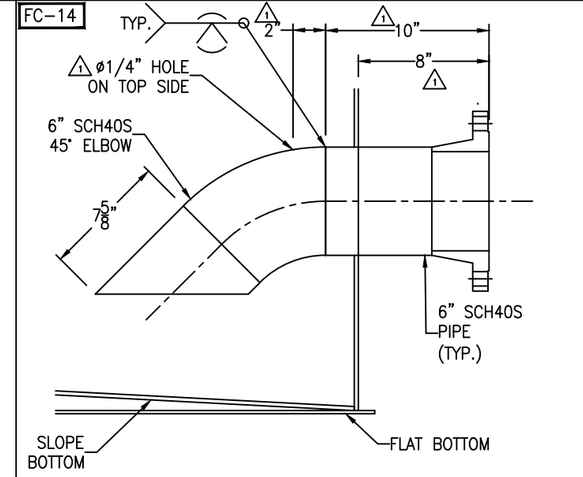

NOZZLE D2 DETAIL

SCALE: 2" = 1'-0"

FC-14

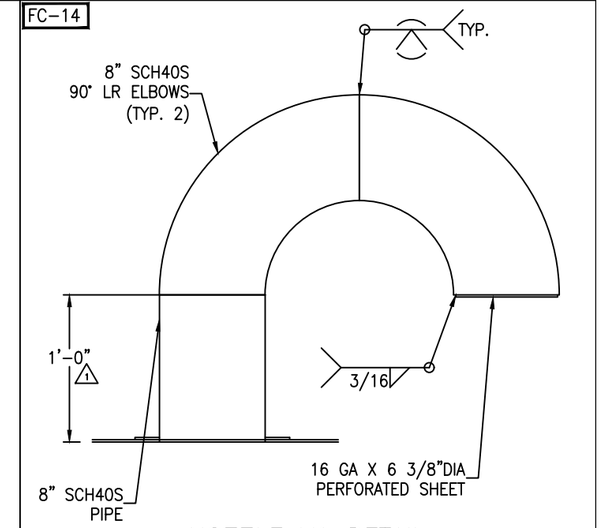

NOZZLE V1 DETAIL

SCALE: 1 1/2" = 1'-0"

FC-14

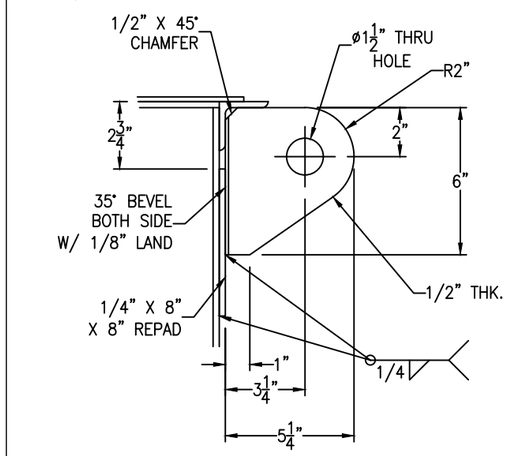

TANK WT. <= 10000#
SHACKLE PIN DIA. = 1 3/8"

LIFT LUG DETAIL

(2 REQ'D) SCALE: 3" = 1'-0"

FC-14

SHIM PLATE TO BE SHIPPED LOOSE

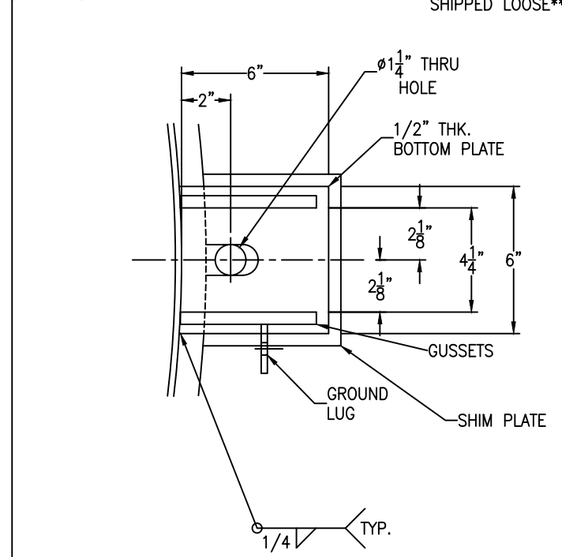

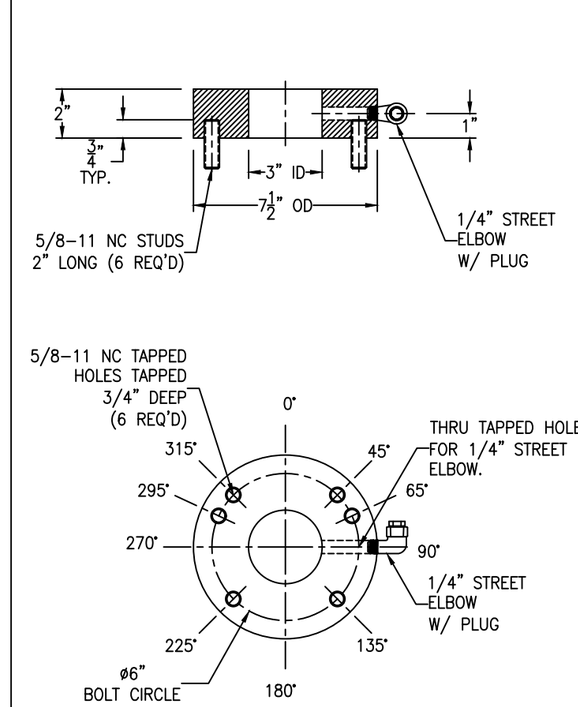

SPECIAL STUDPAD DETAIL

(1 REQ'D) SCALE: 3" = 1'-0"

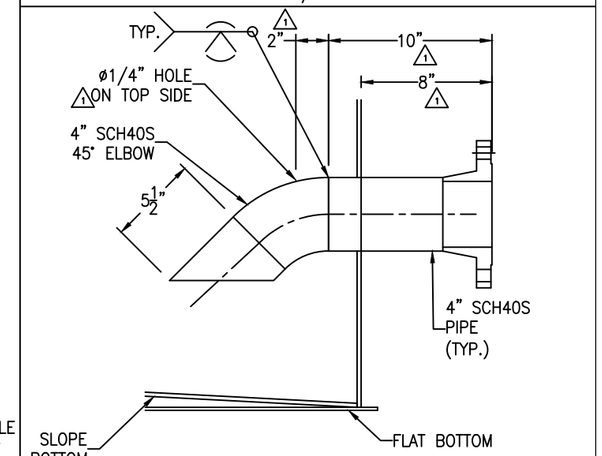

NOZZLE D1 DETAIL

SCALE: 2" = 1'-0"

FC-14

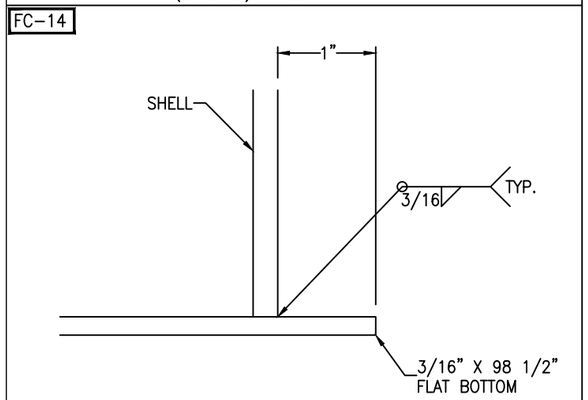

FLAT BOTTOM DETAIL

SCALE: 1'-0" = 1'-0"

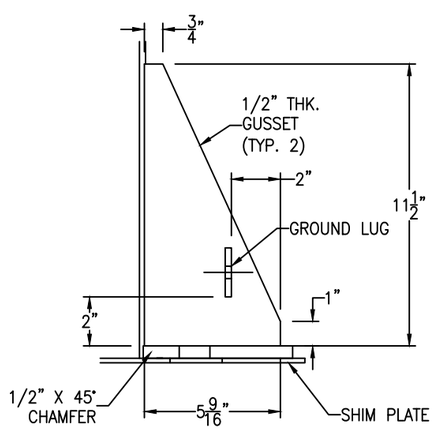

△1 ANCHOR LUG DETAIL

(4 REQ'D) SCALE: 3" = 1'-0"

SHIM PLATE TO BE SHIPPED LOOSE

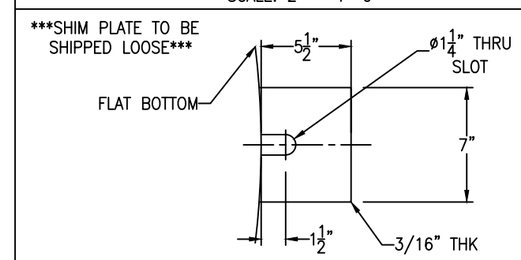

△1 SHIM PLATE DETAIL

(4 REQ'D) SCALE: 2" = 1'-0"

REV	D.BY	C.BY	DATE	DESCRIPTION
2				AS BUILT
1	AD	RS	5/21/25	CERTIFIED
0	RS	AD	2/18/25	APPROVAL

△1 REVISIONS

Savannah Tank & Equipment Corp.
1517 Telfair Road, Savannah, GA 31415
(912) 233-8902

DRAWN BY:	RS
CHK'D BY:	AD
APPROVED BY:	NP
SCALE:	1/4" = 1'-0"

KIMBERLY CLARK
CLEAR FILTRATE TANK
EQUIP. # 360-TK-36101
CUST. PO #C000139275

DRAWING NO.: 015-25-2 SHT 2 OF 5 REV. SET 1

FC-14

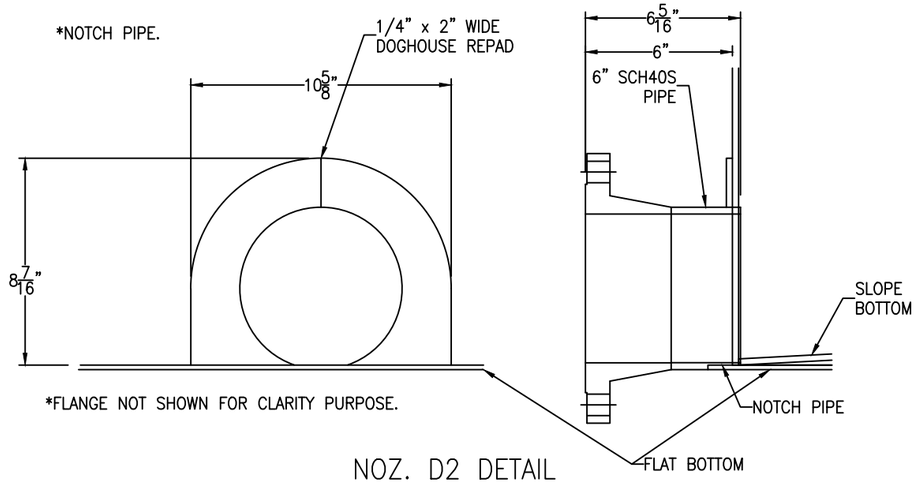

NOZ. D2 DETAIL

SCALE: 3" = 1'-0"

FC-14

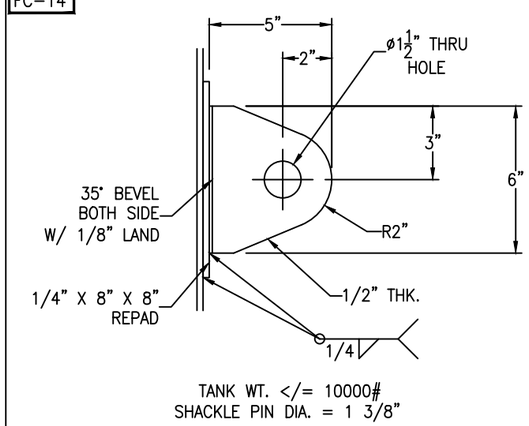

TAILING LUG DETAIL

SCALE: 3" = 1'-0"

FC-14

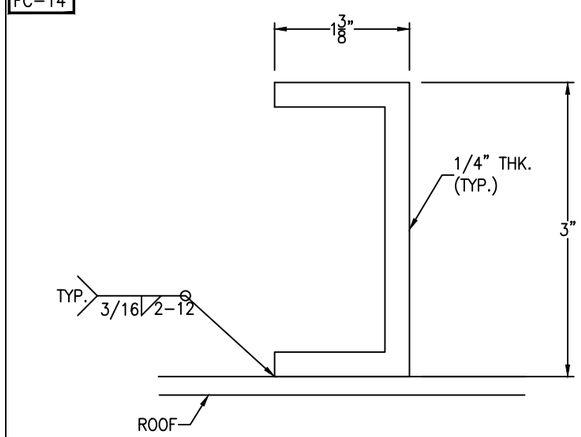

SHOP FAB. CHANNEL DETAIL

SCALE: 1'-0"" = 1'-0"

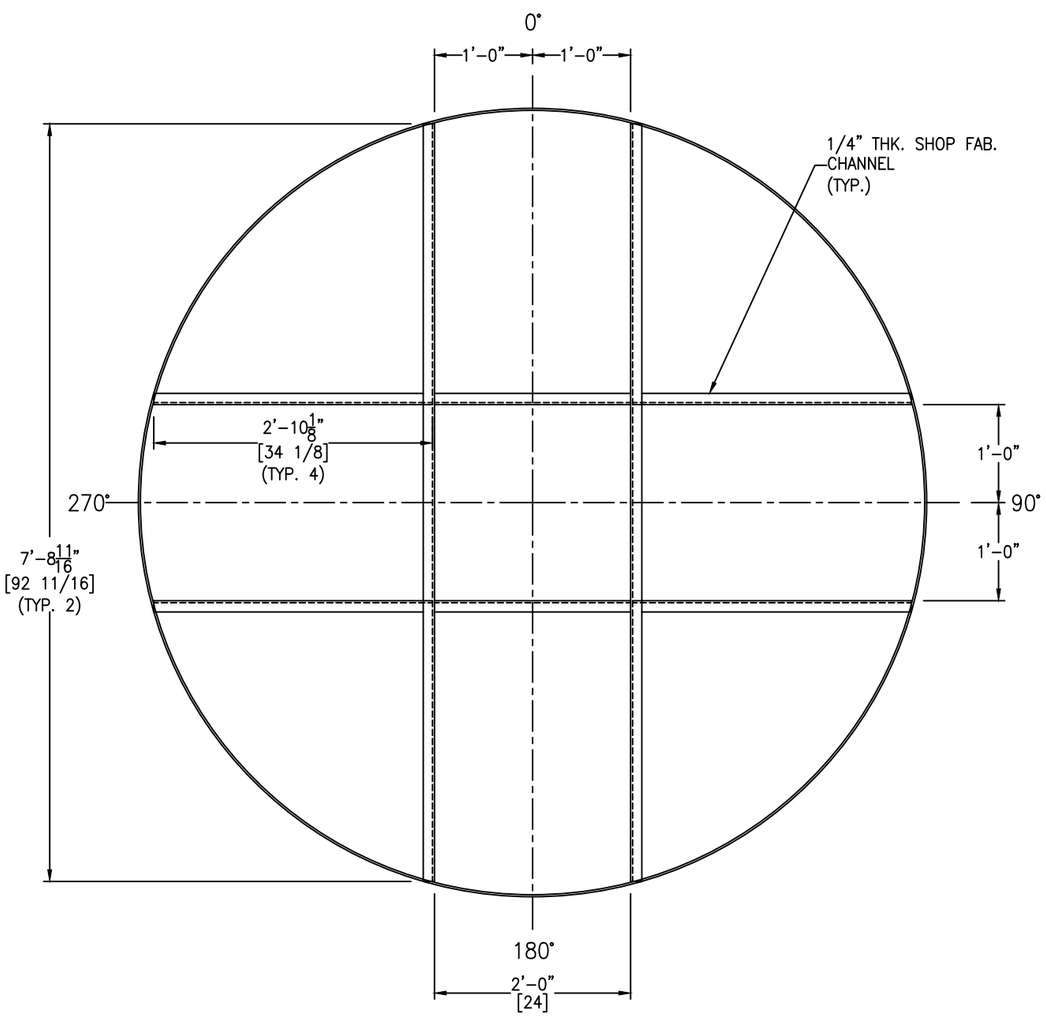

ROOF STIFFENERS DETAIL

SCALE: 1" = 1'-0"

FC-14

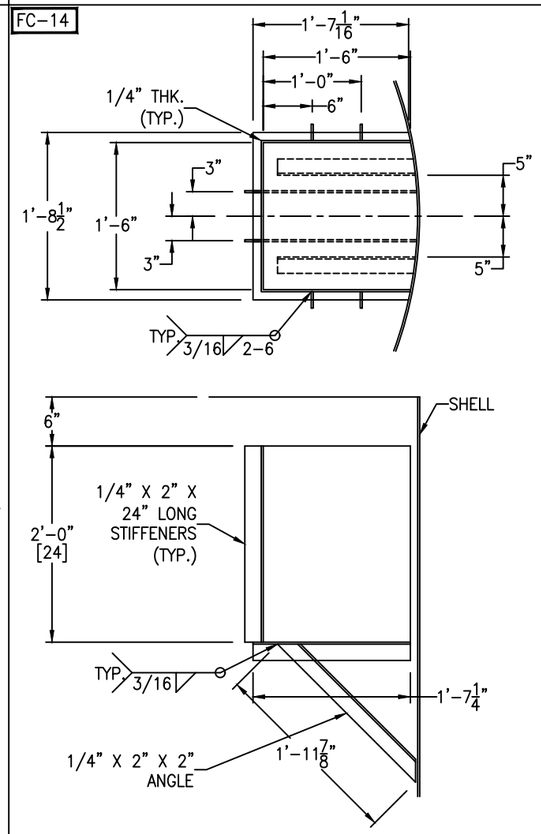

SEAL POT DETAIL

SCALE: 1" = 1'-0"

REV	D.BY	C.BY	DATE	DESCRIPTION
2				AS BUILT
1	AD	RS	5/21/25	CERTIFIED
0	RS	AD	2/18/25	APPROVAL

⚠ REVISIONS

Savannah Tank & Equipment Corp.
1517 Telfair Road, Savannah, GA 31415
(912) 233-8902

DRAWN BY: RS
CHK'D BY: AD
APPROVED BY: NP
SCALE: 1/4" = 1'-0"

KIMBERLY CLARK
CLEAR FILTRATE TANK
EQUIP. # 360-TK-36101
CUST. PO #C000139275

DRAWING NO.: 015-25-3 SHT 3 OF 5 REV. SET 1

FC-14

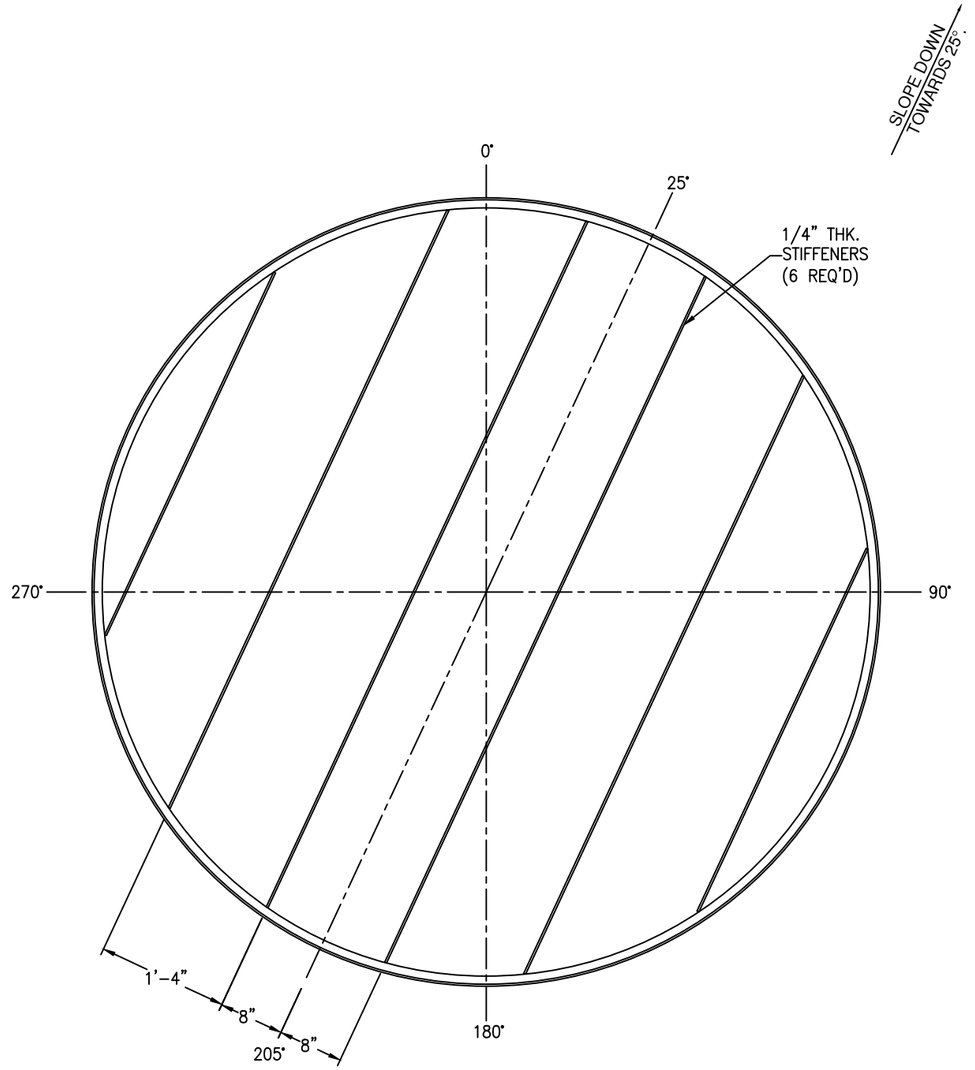

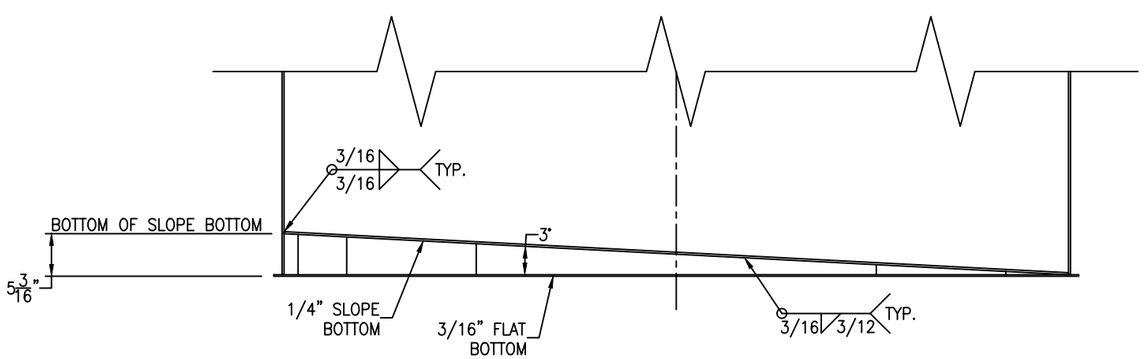

SLOPE BOTTOM DETAIL

SCALE: 1" = 1'-0"

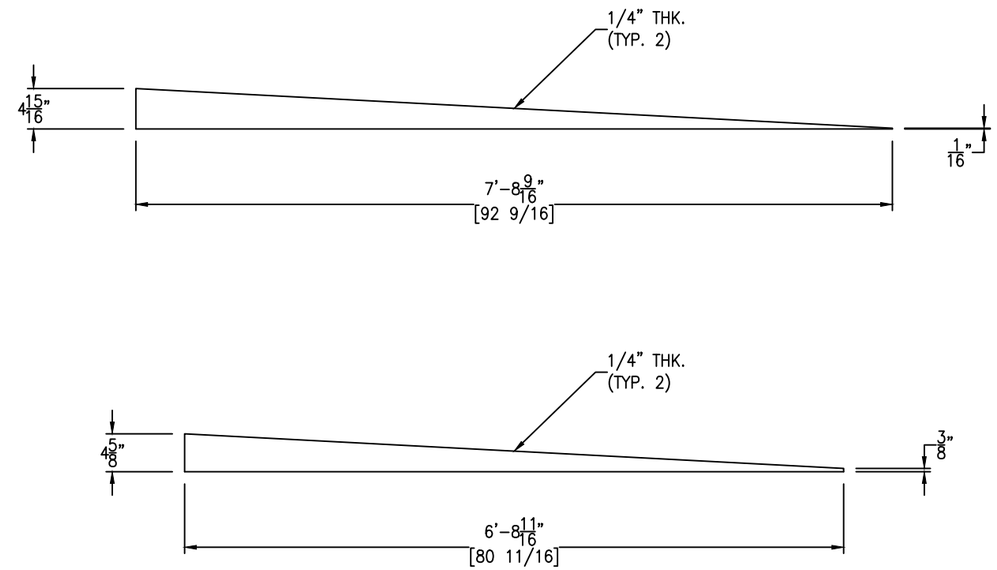

STIFFENERS DETAIL

SCALE: 1" = 1'-0"

REV	D.BY	C.BY	DATE	DESCRIPTION
2				AS BUILT
1	AD	RS	5/21/25	CERTIFIED
0	RS	AD	2/18/25	APPROVAL

REVISIONS

Savannah Tank & Equipment Corp.
1517 Telfair Road, Savannah, GA 31415
(912) 233-8902

DRAWN BY: RS
CHK'D BY: AD
APPROVED BY: NP
SCALE: 1/4" = 1'-0"

KIMBERLY CLARK
CLEAR FILTRATE TANK
EQUIP. # 360-TK-36101
CUST. PO #C000139275

DRAWING NO.: 015-25-4 SHT 4 OF 5 REV. SET 1

FC-14

Bolting for blinds
X1: (12) 7/8-9 NC x 5" FULL THREADED STUD
(24) 7/8-9 NC HH NUT
(1) 12" 150# RING GASKET X 1/8" THK
(48) BELLEVILLE WASHERS (17-7 STAINLESS STEEL)

Bolting for hinge
(2) 1/2-13 NC x 1 1/2" HH BOLT
(2) 1/2-13 NC HH NUT

*NOTE: PLEASE CONFIRM THE ORIENTATION FOR HINGE. SEE SHEET #1 FOR ORIENTATION.

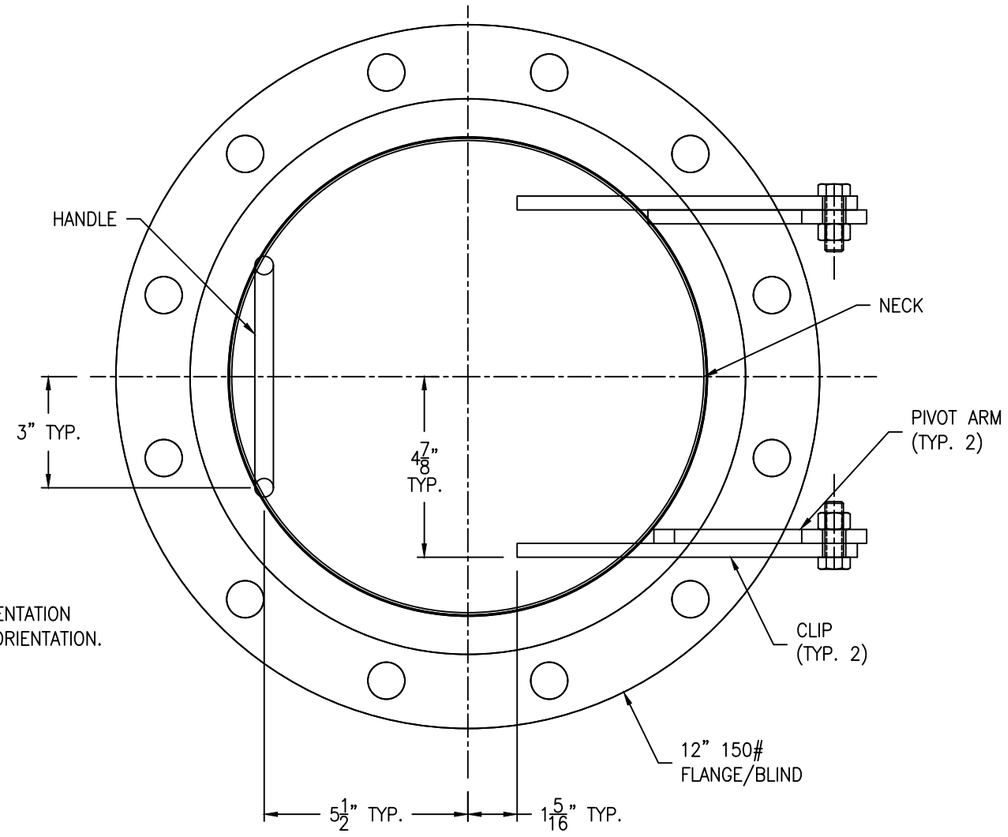

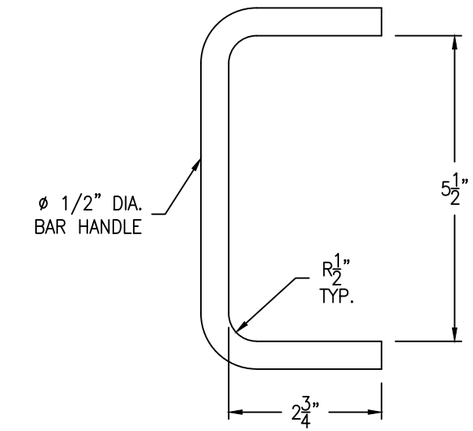

HANDLE DETAIL

(1 REQ'D) SCALE: 6" = 1'-0"

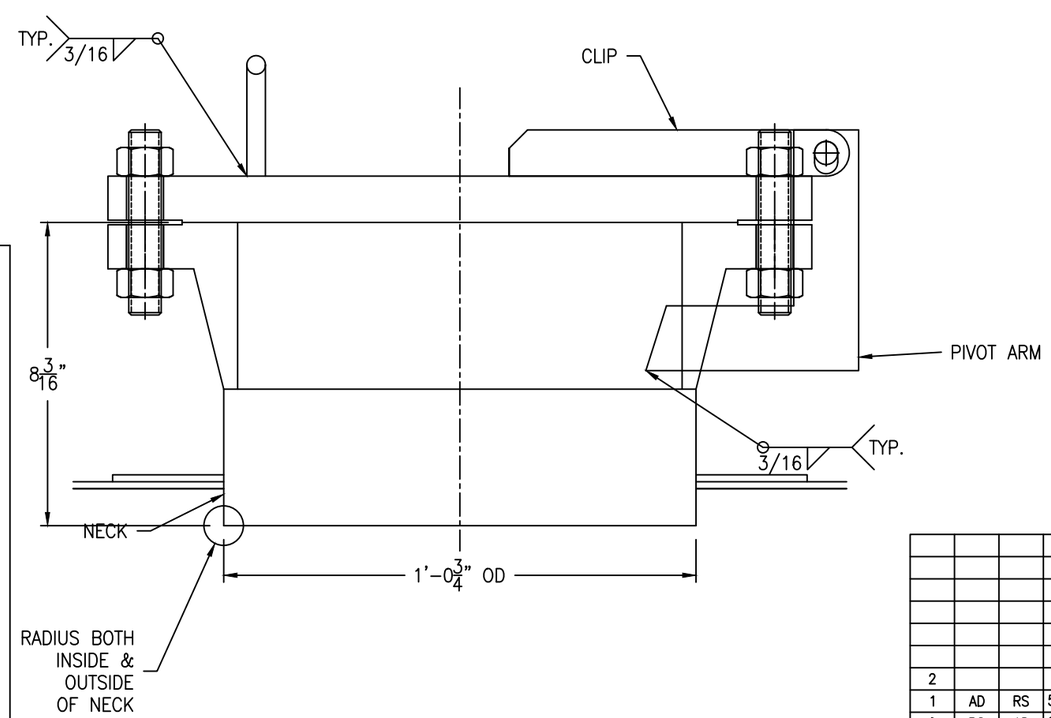

(1 REQ'D) SCALE: 4" = 1'-0"

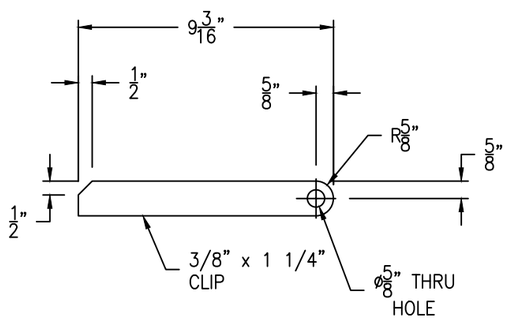

CLIP DETAIL

(2 REQ'D) SCALE: 3" = 1'-0"

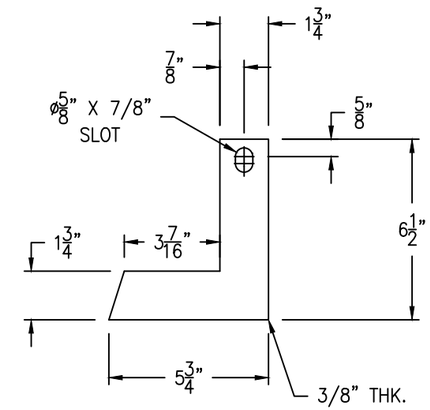

PIVOT ARM DETAIL

(2 REQ'D) SCALE: 3" = 1'-0"

REV	D.BY	C.BY	DATE	DESCRIPTION
2				AS BUILT
1	AD	RS	5/21/25	CERTIFIED
0	RS	AD	2/18/25	APPROVAL

REVISIONS

Savannah Tank & Equipment Corp.
1517 Telfair Road, Savannah, GA 31415
(912) 233-8902

DRAWN BY: RS
CHK'D BY: AD
APPROVED BY: NP
SCALE: 2" = 1'-0"

KIMBERLY CLARK
CLEAR FILTRATE TANK
EQUIP. # 360-TK-36101
CUST. PO #C000139275

DRAWING NO.: 015-25-5 SHT 5 OF 5 REV. SET 1